UNIQUE VACUUM
SOLUTIONS

OIL SEALED BELT DRIVE ROTARY VANE VACUUM PUMP

IVP- SERIES

CAPACITY: 100 TO 1000 LPM **ULTIMATE VACUUM : <1x10^{-3} mBar**

Salient Features :

- High quality reliable pump, economically priced
- Advanced compact rugged design
- Light weight, offers high degree of vacuum with lower consumption of power & oil
- Components manufactured on high precision CNC machining center and NC griding machine using modern manufacturing technology ensure perfect sealing and 100% interchangeability of parts
- Specially graded cast Iron vanes machined to very close tolerances ensure high vacuum levels
- Low noise and vibration levels with low vacuum oil charge
- No internal / external leakage
- Cartridge type design enabling easy and fast serviceability at site
- Intake port with anti-suckback mechanism (optional)
- Ready availability of spares, backed by nationwide efficient after sales service

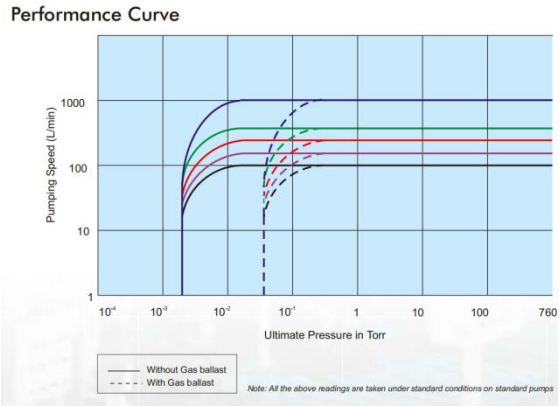

-------IVP 1.0K -------IVP 600 -------IVP 300 -------IVP 180 -------IVP 100

UNIQUE VACUUM SOLUTIONS

E: nagendrautpath@uniquevacuum.co.in
M: +91 9886726920
P: 080-28367059
A: Unique Vacuum Solutions, #57 8th cross 1st b cross, Doddanna Industrial Estate, Vishwaneedam Post, Peenya 2nd stage, Bengaluru 560091
www.uniquevacuum.co.in

UNIQUE VACUUM SOLUTIONS

TECHNICAL DATA:

MODEL	UNIT	IVP-100	IVP-180	IVP-300	IVP-600	IVP-1000
Displacement (50 Hz)	LPM	100	180	300	600	1000
Displacement	m3/hr	6	10.8	18	36	60
Ultimate Pressure with gas ballast without gas ballast	torr torr	$<1X10^{-2}$ $<1X10^{-3}$				
Inlet Port	mm	25	32	32	46	50
Exhaust Port	---	PF3/4”	PF1”	PF1”	PF1 1/2”	PF1 1/2”
Motor Power 1ph / 3 ph	kW	0.4	0.4	0.75	0.75	1.5
Rotational Speed	RPM	600				
Oil capacity	Litre	1.3	1.8	2.2	4	6
Weight of Pump	kg	28	32	35	51	105
Weight including motor	kg	45	50	60	80	130

Outside Dimensions

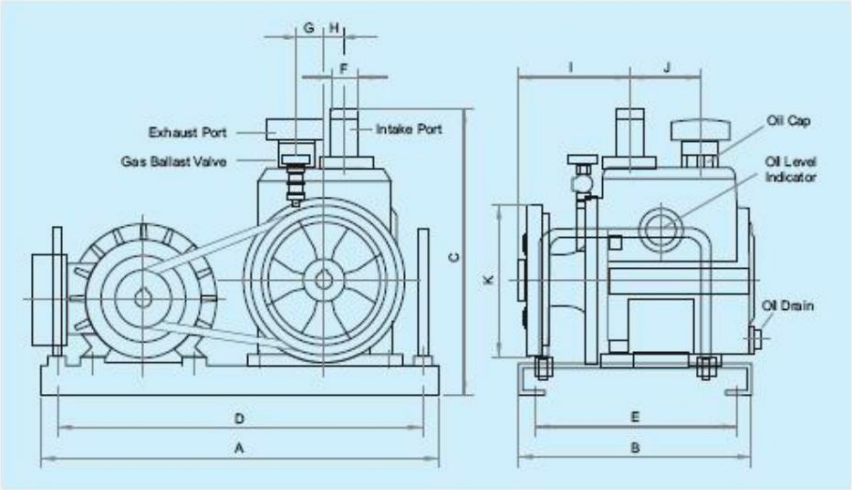

DIMENSIONS	MODEL	A	B	C	D	E	ØF	G	H	I	J	ØK	ØL
	IVP 100	463	250	285	425	175	25	30	20	122	73	171	13
	IVP 180	488	285	342	450	200	32	35	25	135	88	171	13
	IVP 300	545	310	365	515	275	32	40	30	145	100	171	13
	IVP 600	610	350	424	580	310	46	50	35	171	110	210	13
	IVP 1.0K	640	420	504	610	340	49.5	59	40.5	192	130	219	13

All dimensions are in mm

Applications: **Electrical Industry -** Transformer oil purification - Impregnation - Capacitor **Metallurgy** - Vacuum Furnace - Degassing - Casting - **Impregnation Chemical / Pharma / Food Industry - Drying - Distillation - Evaporation - Solvent Extraction - Degassing Refrigeration & Air conditioning Vapour Absorption Machines Lamp Manufacturing - GS, TL, CFL Oil Treatment Jewellery Casting.**

UNIQUE VACUUM SOLUTIONS

E: nagendrautpath@uniquevacuum.co.in
M: +91 9886726920
P: 080-28367059
A: Unique Vacuum Solutions, #57 8th cross 1st b cross, Doddanna Industrial Estate, Vishwaneedam Post, Peenya 2nd stage, Bengaluru 560091
www.uniquevacuum.co.in